F.A. Parkes (M.B.F) Limited
Unit 4, Acorn Court
Butts Street, Leigh
Lancashire WN7 3AE
Tel. 01942 681 996
sales@faparkes.co.uk

6-300 Latch System

with cam

Polyamide Heavy Duty latch with handles on both sides.

- Instead of bearing d) and bezel e) you can also use the round polyamide bezel e.g. 232-0401 or polyamide bezel 232-0402 / 03 see page 05.27.

Material:

a), a1), b) and b1)

- **Handle in- and outside:** PA, black
- **Core for a1) and b1):** steel, zinc plated

c)

- **Locking cam:** aluminium

d), e), f) and g)

- **Bearing plate, bezel, locking stub and shaft, complete:** steel, zinc plated

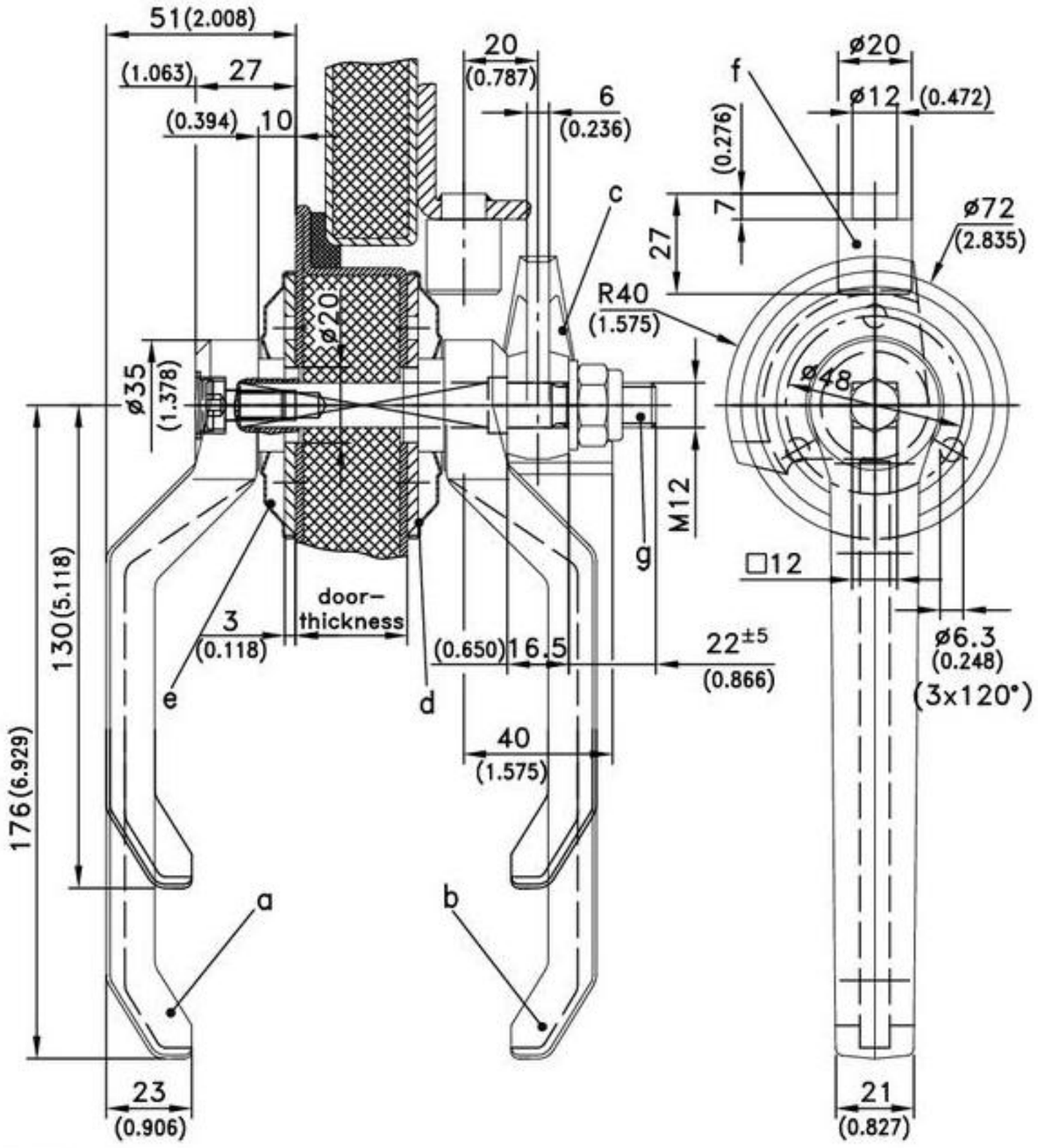

	Version		Part No.	see page
a)	Handle outside	length 130 / 5.118	232-0201	
	Handle outside	length 176 / 6.929	232-0202	
a1)	Handle outside	length 130 / 5.118	232-0207	
	(steel, zinc plated core)	length 176 / 6.929	232-0208	
b)	Handle inside	length 130 / 5.118	232-0301	
	Handle inside	length 176 / 6.929	232-0302	
b1)	Handle inside	length 130 / 5.118	232-0303	
	(steel, zinc plated core)	length 176 / 6.929	232-0304	
c)	Locking cam		232-0601	
d)	Bearing plate steel zinc plated		232-0404	
e)	Bezel steel zinc plated		232-0405	
	all PA bezels			05.27
f)	Locking stub		232-0801	
g)	Complete shaft with socket-head screw, small cover, washer and self locking nut			
		Door-thickness	Part No.	
		20±5 / 0.787±0.197	232-9103	
		30±5 / 1.181±0.197	232-9104	
		40±5 / 1.575±0.197	232-9105	
		50±5 / 1.969±0.197	232-9106	
		60±5 / 2.362±0.197	232-9107	
		80±5 / 3.150±0.197	232-9109	
		100±5 / 3.937±0.197	232-9111	