F.A. Parkes (M.B.F) Limited
Unit 4, Acorn Court
Butts Street, Leigh
Lancashire WN7 3AE
Tel. 01942 681 996
sales@faparkes.co.uk

7-210 Hinge Pr04 180°

stainless steel AISI 316, Lift-off for surface mounted door

Screw-on Hinge, Lift-off. RH or LH application.

- The sloping ends prevent the deposit of dust or dirt.

Material:

- **Hinge completely:** stainless steel

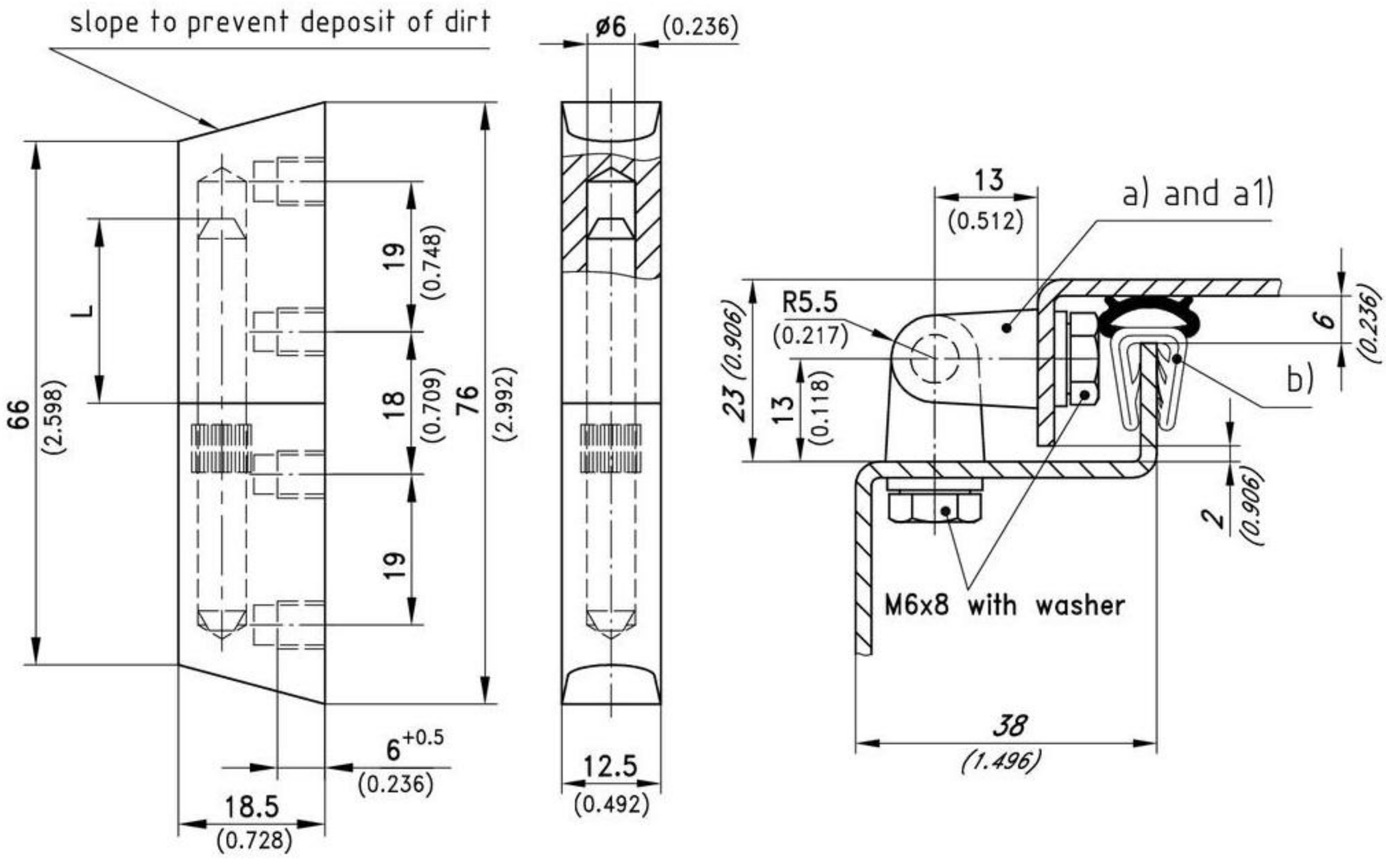

	Part No.	see page
a) Pin L=23	224-9003	
a1) Pin L=17.6	224-9005	
b) e.g. Clip-on profile	209-0201	07.19