F.A. Parkes (M.B.F) Limited
Unit 4, Acorn Court
Butts Street, Leigh
Lancashire WN7 3AE
Tel. 01942 681 996
sales@faparkes.co.uk

4-326 Hinge Pr04 180°

for surface mounted door

180° DIRAK RoHS WEEE compliant

Hinge for surface mounted doors, screw-on.

- The stainless hinge pin pivots in PA bushings.
- The 2 upper examples of applications show the asymetric layout of the door part. This layout allows for a wide variety of door bendings.
- The knurled pin can be replaced by a pin with 2 C-clips see page 06.28.

Material:

- **Frame and middle part:** zinc die, black or chrome plated
- **Pin:** stainless steel
- **Bushings:** PA, natural

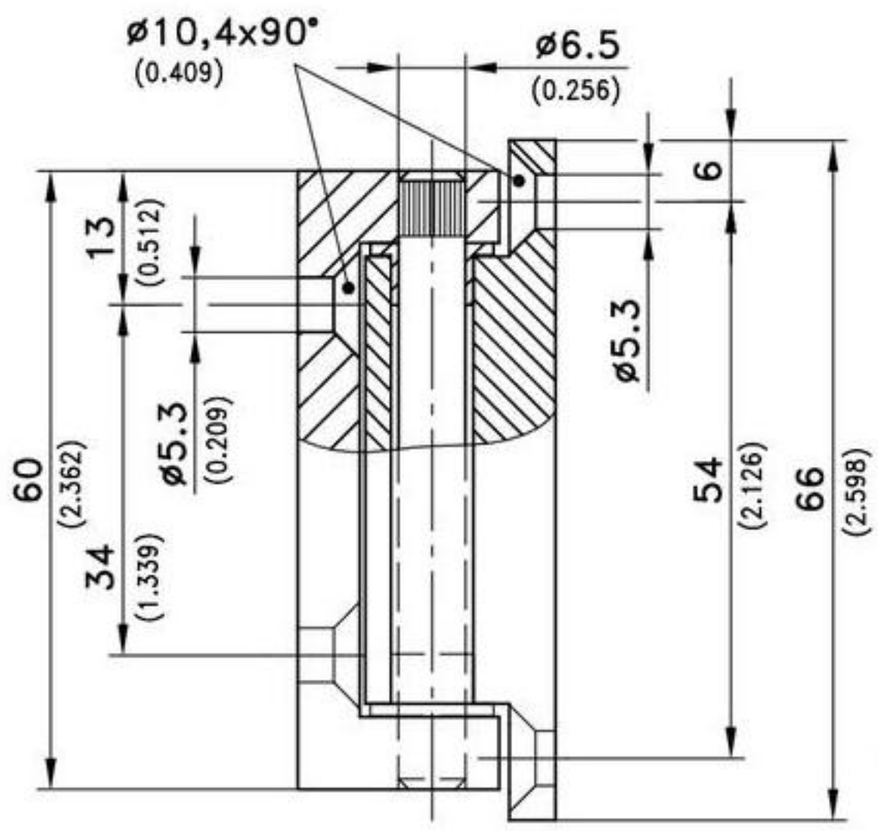

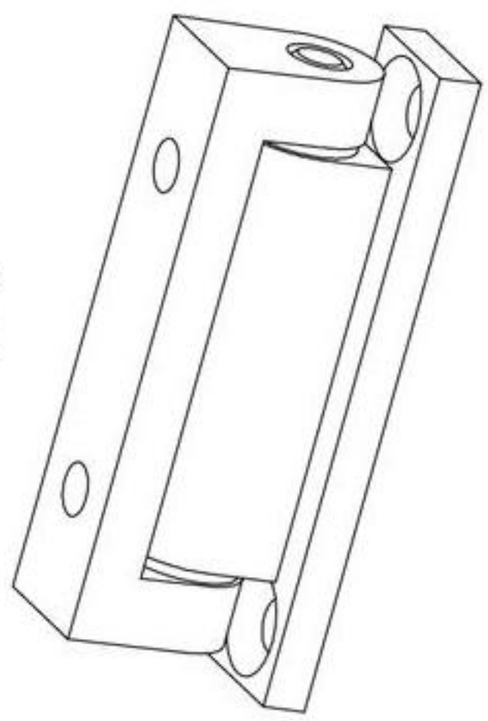

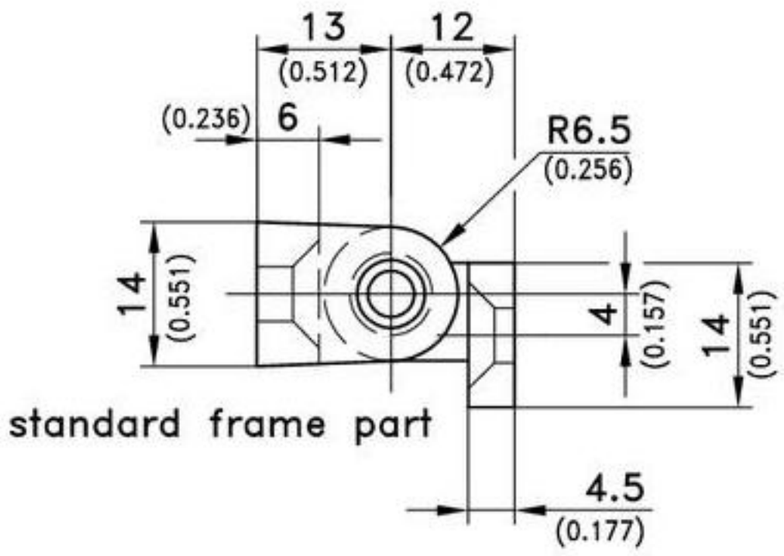

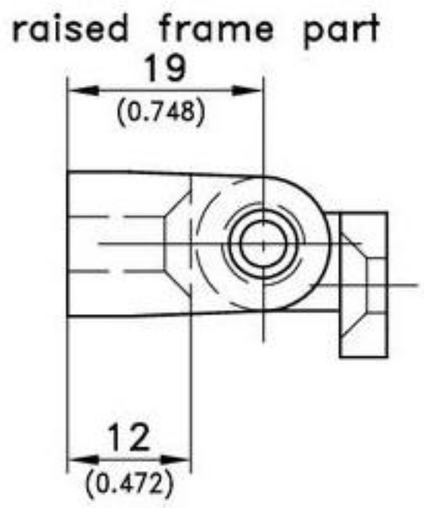

Examples of application

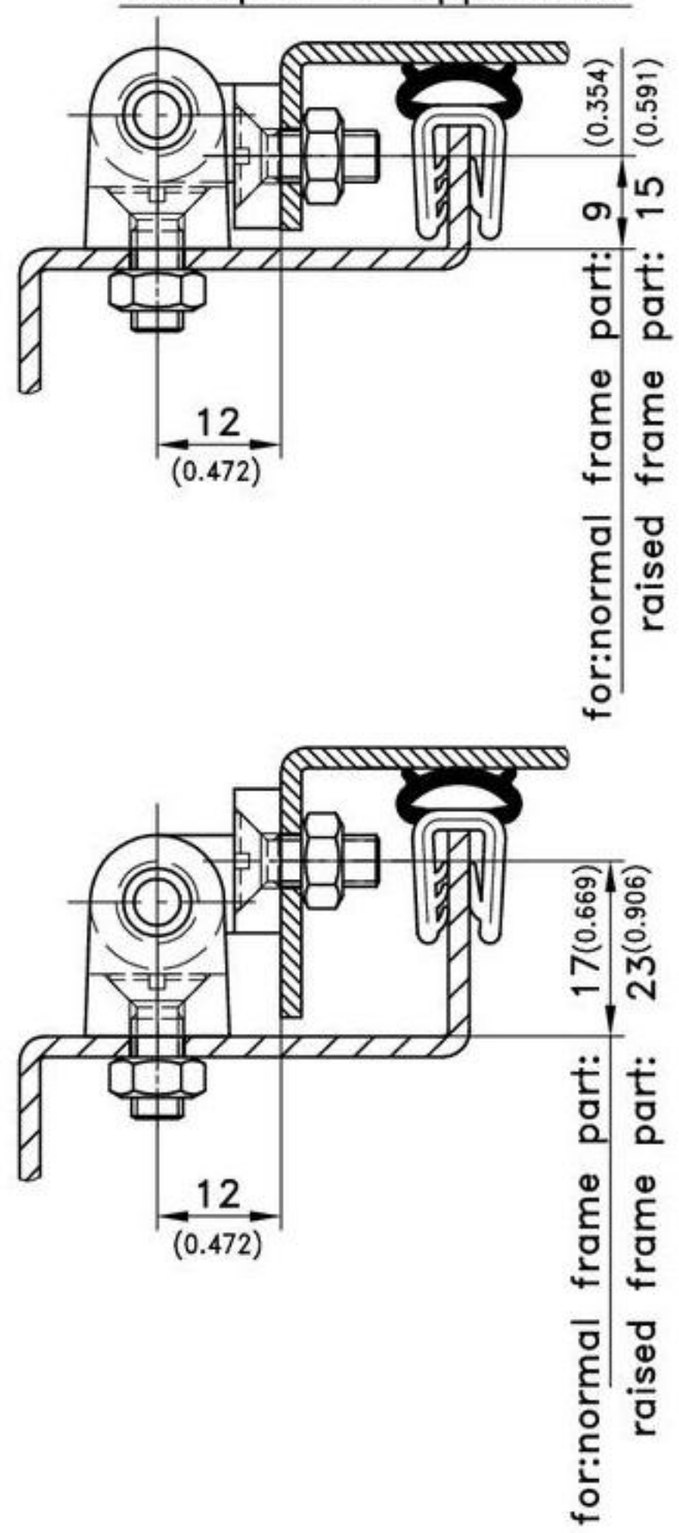

Surface of frame part	Standard frame part	Raised frame part	see page
chrome plated	217-9301	217-9303	
black coated	217-9302	217-9304	
Countersunk machine screws zinc plated			09.5