Product Datasheet

Buy on-line at the FA Parkes sales portal
www.faparkes.co.uk - your one stop shop!

F.A. Parkes (M.B.F) Limited
Unit 4, Acorn Court
Butts Street, Leigh
Lancashire WN7 3AE
Tel. 01942 681 996
sales@faparkes.co.uk

7-104 Quarter-Turn with Handle Pr20.1 L18

stainless steel AISI 316

IP 65 | ↔20↕ | DIRAK RoHS/WEEE compliant

L-Handle for padlock.
- RH or LH application.
- The L-Handle consists of two basic parts which can be combined to suit your application.
- Water- and dust-tight according to IP65 DIN EN 60529 with 2 O-rings.

Material:
- **Handle, hook and housing:** stainless steel
- **Cam:** stainless steel or steel, zinc plated

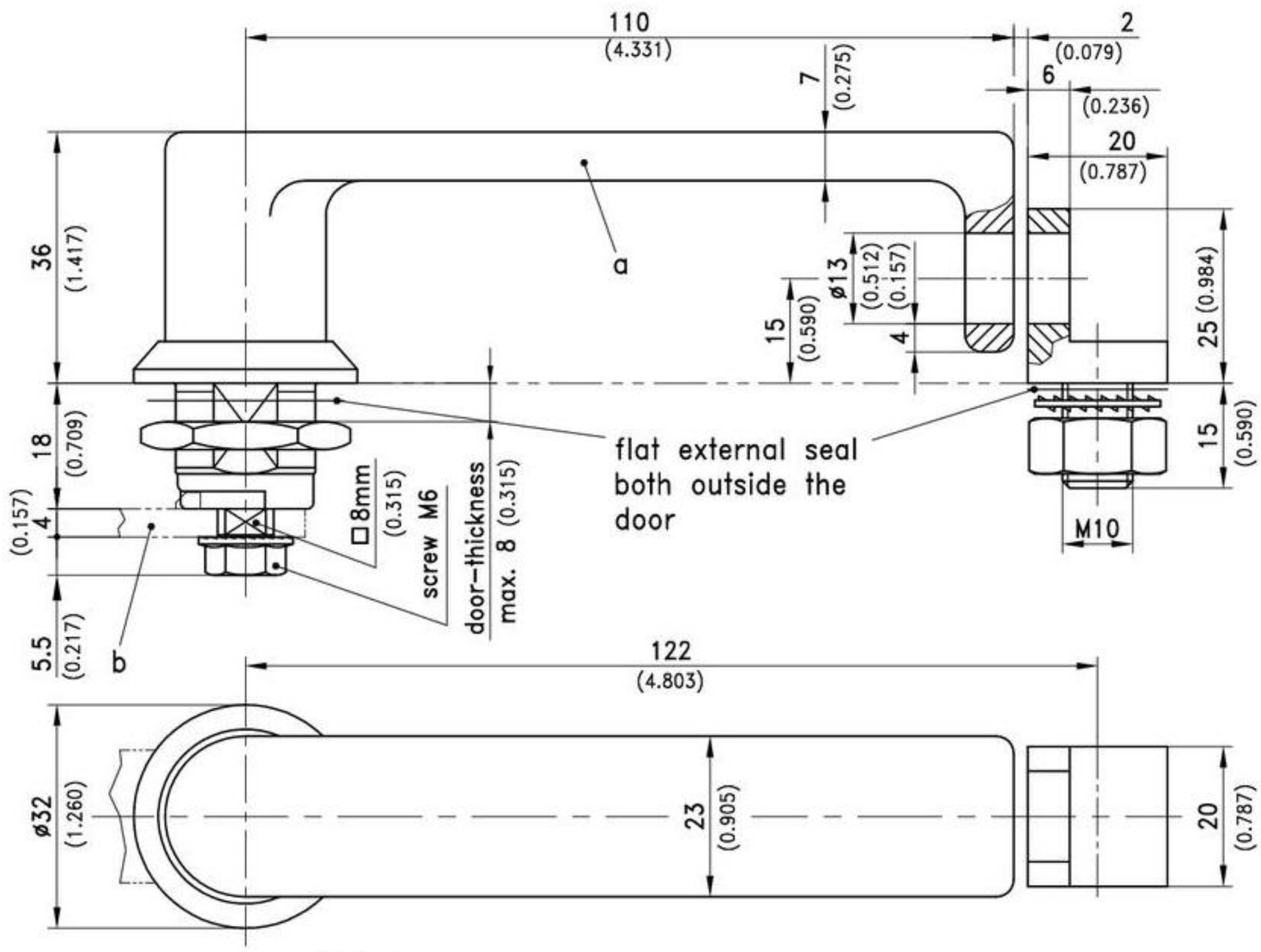

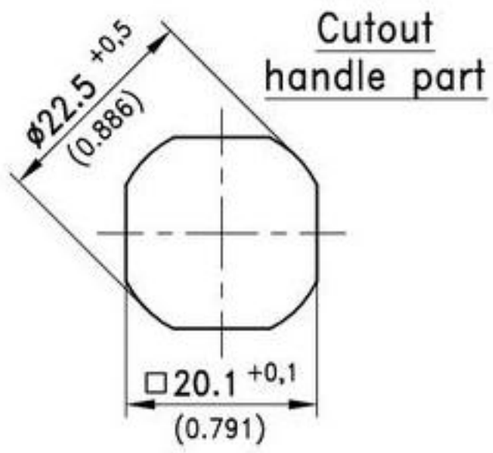

	Part No.	see page
a) L-Handle complete	200-9425	
b) Cam		10.10, 10.12, 02.58, 02.61
Standard version		02.50