Buy on-line
at the FA Parkes
sales portal
the quickest
and most efficient
way to purchase
all your hardware
requirements;locks
handles, hinges
stays, gasketing
etc....
www.faparkes.co.uk
your one stop shop!

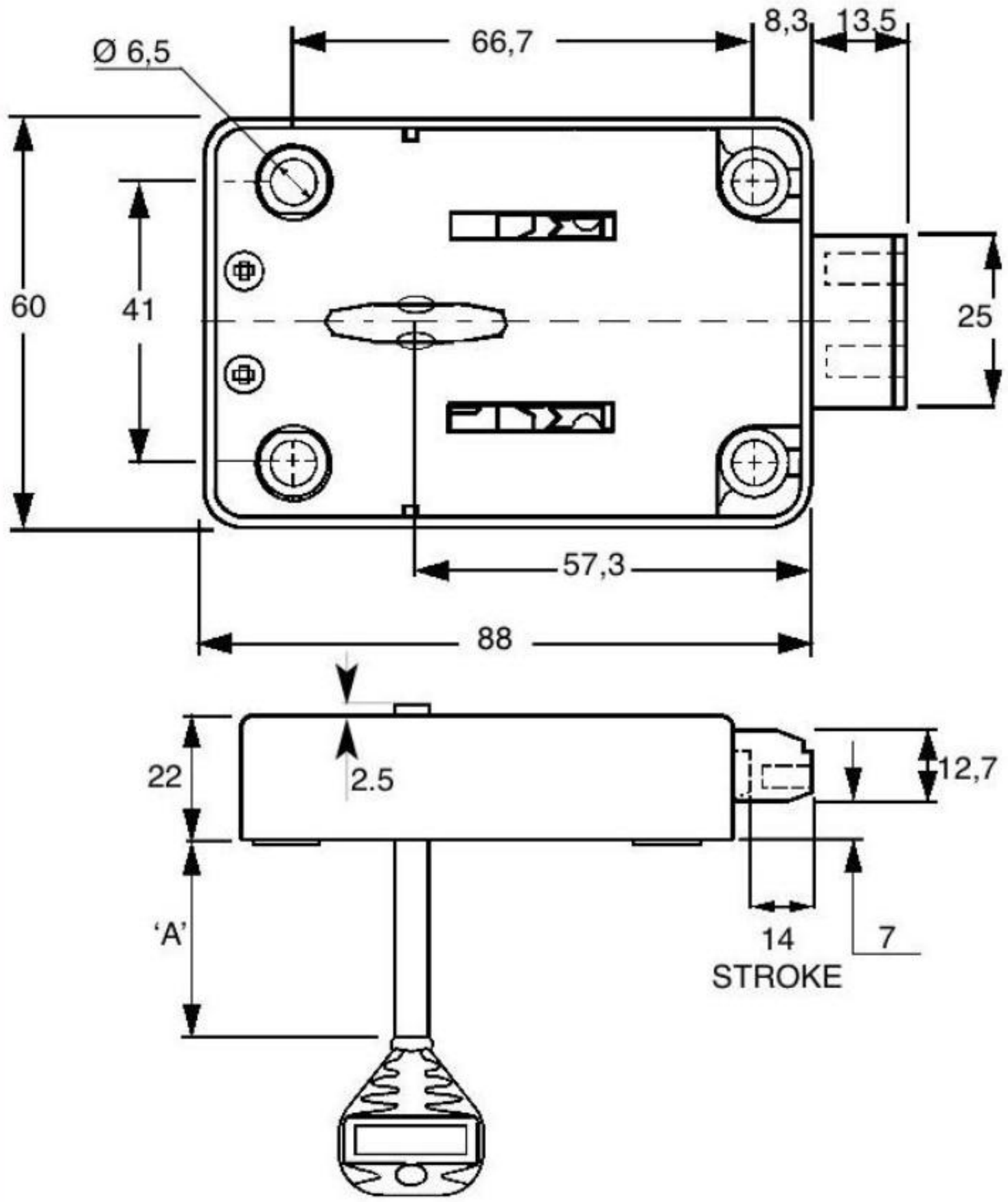

PRODUCT REFERENCE NUMBERS			
PRODUCT REFERENCE NUMBERS	KEY SERIES	COMBINA-TIONS	FIXING
3012060A	SR1	80,000	LEFT EDGE RH HINGED DOOR
3012080A	SR1	80,000	RIGHT EDGE LH HINGED DOOR

STANDARD MOVEMENTS: 6, 8

STANDARD FINISH: SELF COLOUR

DOUBLE BITTED KEY AVAILABLE IN 4 LENGTHS

DIMENSION 'A' = 15, 40, 70 OR 115, PLEASE SPECIFY WHEN ORDERING.

KEY RETAINED.

HIGH PRECISION DIE CAST & PRESSED STEEL COMPONENTS.

ANTI-PICK LEVERS FITTED AS STANDARD
HIGH STRENGTH BOLT DRILLED & TAPPED M4 X 12.

F.A. Parkes (M.B.F) Limited
Unit 4, Acorn Court
Butts Street, Leigh
Lancashire WN7 3AE

Tel. 01942 681 996
sales@faparkes.co.uk