Buy on-line
at the FA Parkes
sales portal
the quickest
and most efficient
way to purchase
all your hardware
requirements;locks
handles, hinges
stays, gasketing
etc....
www.faparkes.co.uk
your one stop shop!

180° PA-hinge for single cabinets
with 16 mm door return

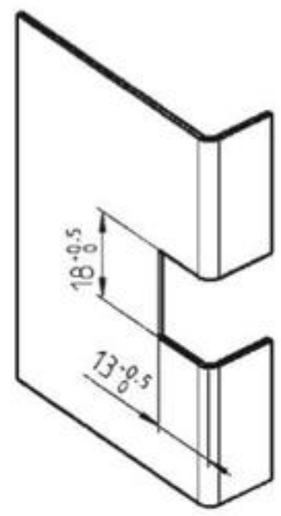

Cut out

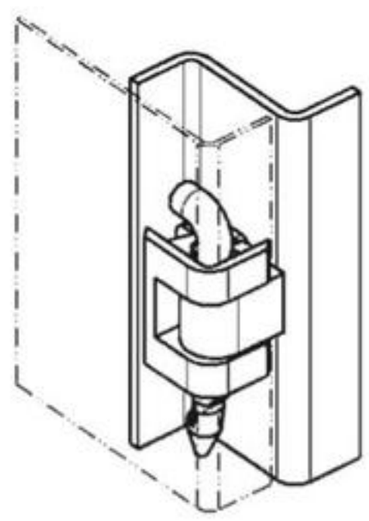

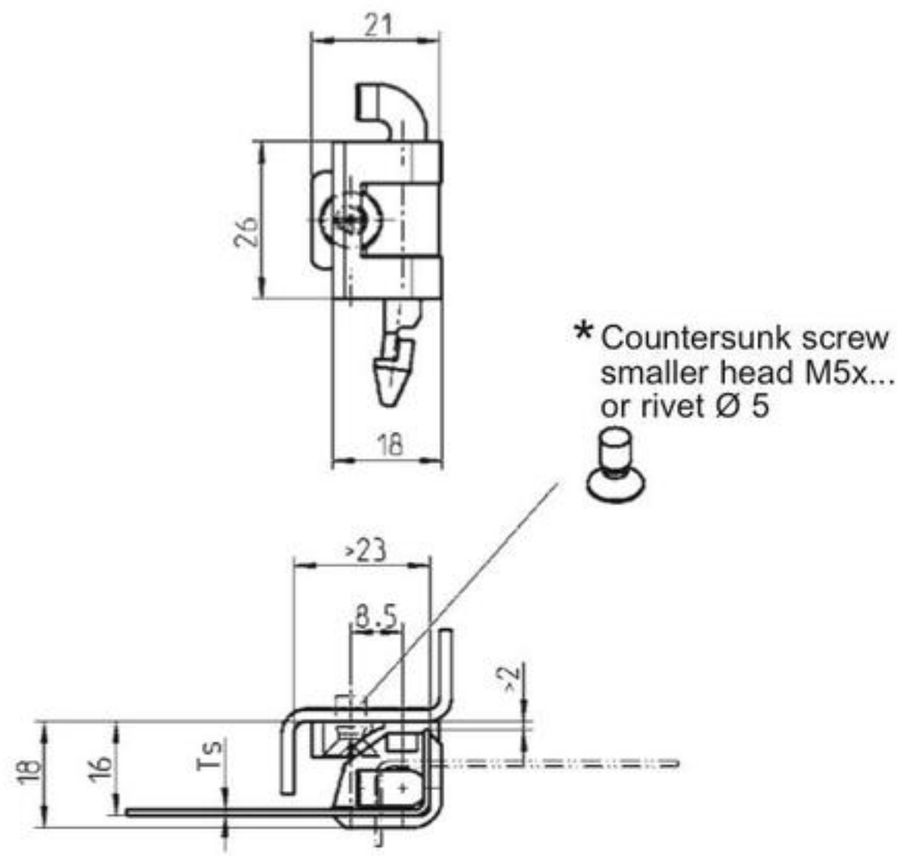

180° hinge polyamide GF black, pin polyamide black	
Ts 1,0 – 1,25 mm	1110-U23
Ts 1,5 – 2,0 mm	1110-U24

180° hinge for single cabinets
for 25 mm door return

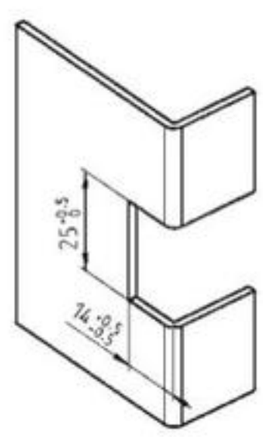

Cut out

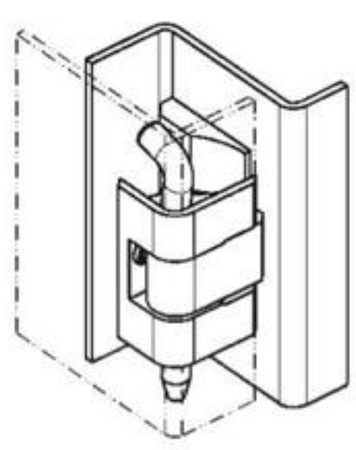

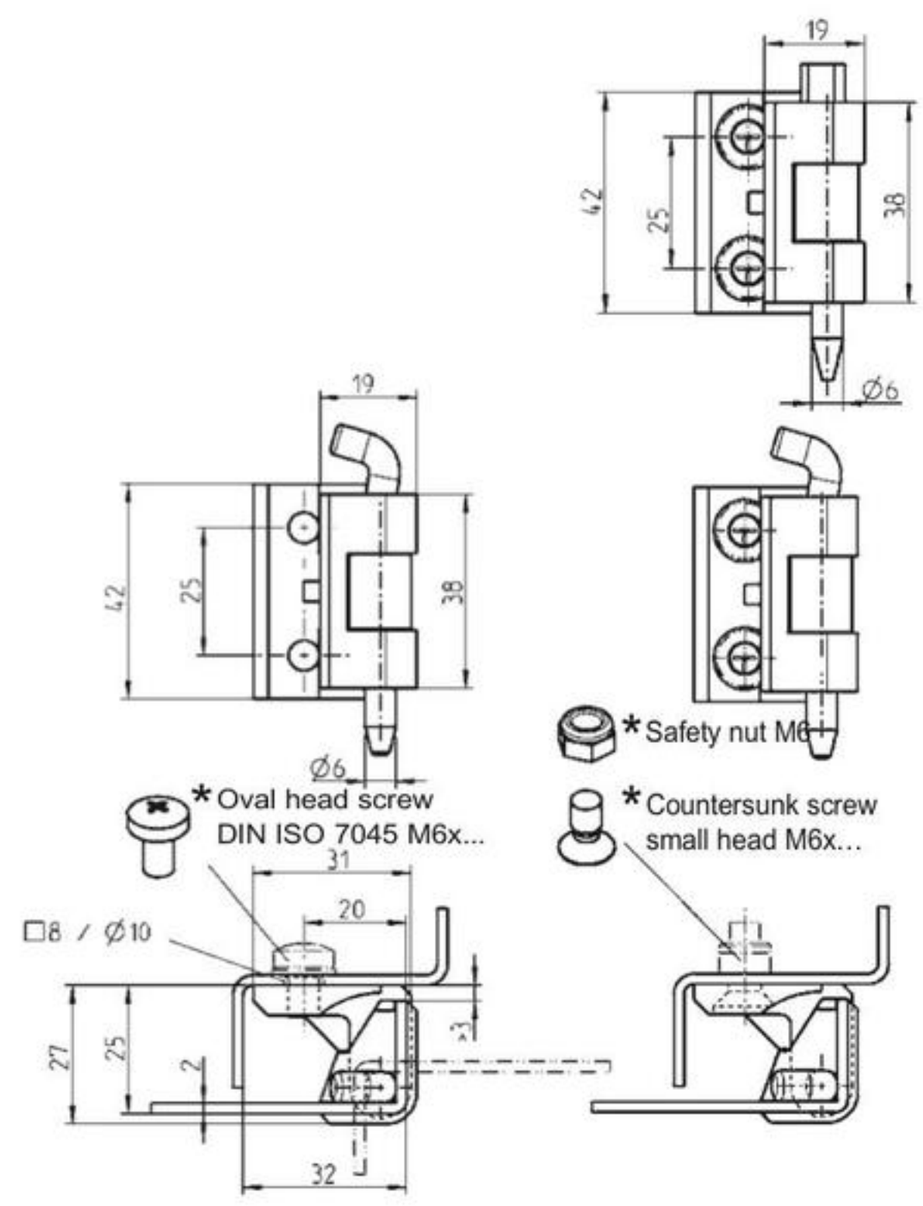

180° hinge zinc die, pin m.s. zinc pl.	chrome plated	black powder coated
Locking screw M6	1110-U20	1110-U22
Countersunk screw M6 (2D-nut possible)	1110-U19	1110-U21
180° hinge polyamide GF black, pin polyamide black		
Countersunk screw M6 (2D-nut possible)		1110-U125

F.A. Parkes (M.B.F) Limited
Unit 4, Acorn Court
Butts Street, Leigh
Lancashire WN7 3AE

Tel. 01942 681 996
sales@faparkes.co.uk